Periodically Poled Lithium Niobate (PPLN) Chip : SHNIR-MC

- Chip Lay-Out

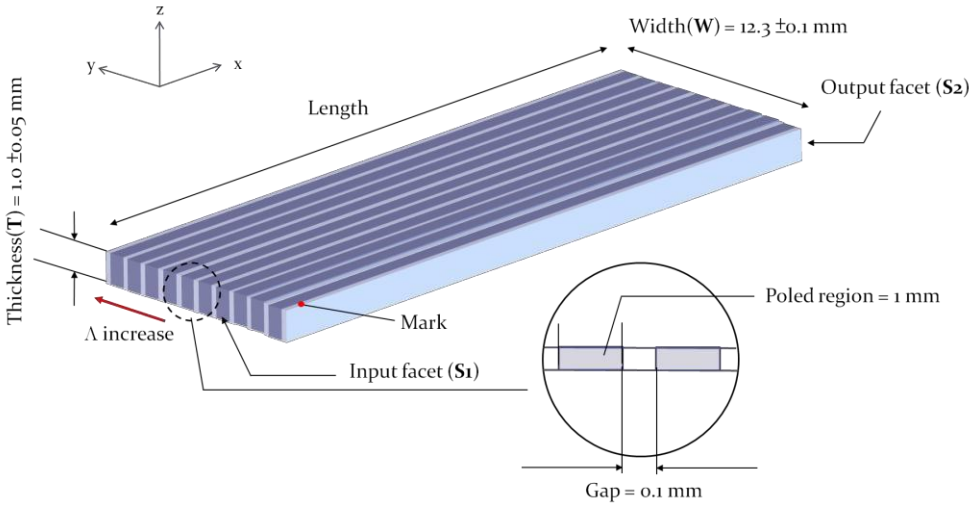

[Image for reference only. Not for scale.]

Items	Properties	Inspection
Material	5 mol.% MgO:LN	NA
Period (Λ, μm)	33.30, 33.60, 33.90, 34.20, 34.50, 34.80, 35.10, 35.40, 35.70, 36.00	Microscope
Main Function	Second Harmonic Generation	NA
Parallelism/Perpendicularity	≤5'/21'	Autocollimator
Flatness	≤λ/6 (λ=633nm)	Interferometer
Scratch/Dig	≤20/10	Microscope
Optical Coating (**S1**/**S2** facets)	S1/S2 @1200~1700(R<1%) /2400~3400(R<5%)nm	Spectral Analyzer
Aperture Size	12.3 x 1.0 mm² (**W** x **T**)	Cutting Machine
Available Length	10/25/50 ± 0.2 mm	
Channel Clear Aperture	≥80% (**T**), ≥90% (**W**)	NA

- Phase Matching Tuning Curve

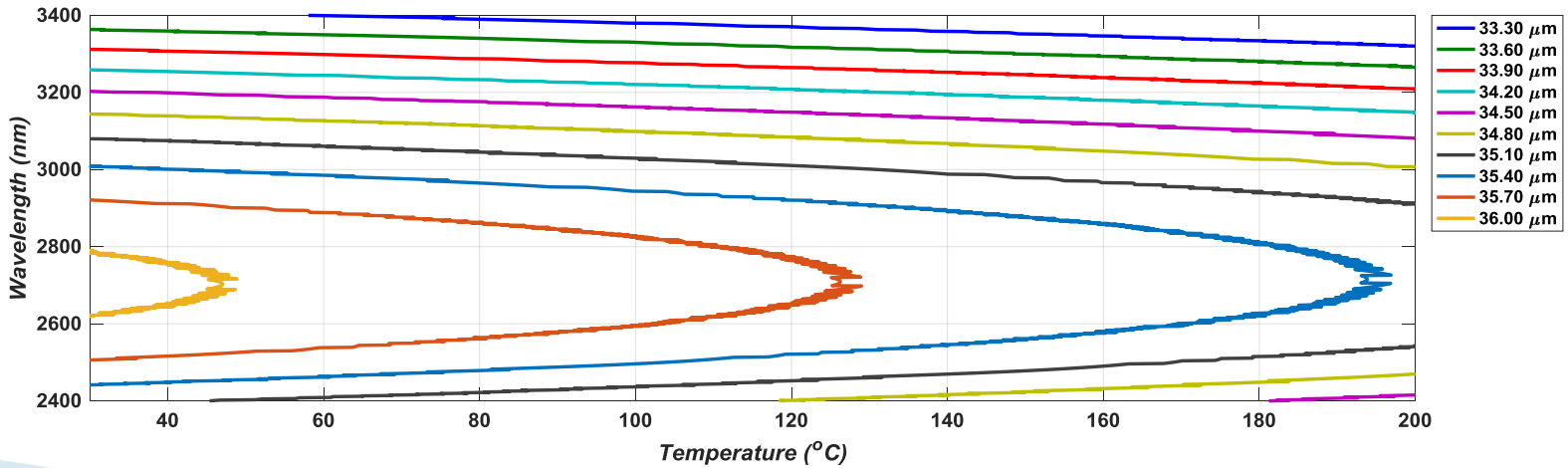

4F., No. 2, Technology Road V. Hsinchu Science Park, Hsinchu 300, Taiwan
Tel: +886-3-6662123 | service@hcphotonics.com | www.hcphotonics.com